Member #«MEMBER» Check #_____

DETROIT REGIONAL YACHT-RACING ASSOCIATION

2007 MEMBERSHIP RENEWAL AND YACHT REGISTRATION

YACHT RE-REGISTRATIONS DUE FEBRUARY 5, 2007

.

NAME_____ Indicate Com, Mr., Mrs., Ms. Etc

ADDRESS_____ DRYA Yacht Club _____

Home Phone _____

CITY_____STATE____ZIP_____ Business Phone_____

Fax Number _____

EMAIL_____

All DRYA information will be by Email in 2007. Check this box if you want US Mail. ☐

Check this box it you do not want your personal data on member only web site. ☐

Multiple owner of Sail**#** _____Yacht Name_____ Design (Ex. Cal 25) _____

TO REGISTER FOR DRYA RACING: Please **Circle** Racing Class: (IRC, PHRF, Cruising PHRF, OD, DH, JAM, All Others)

For multiple owners, only one Yacht Registration Fee is required, but **EACH OWNER MUST BE A DRYA SUSTAINING MEMBER.** The Yacht Registration Fee will appear on the registration of only one owner, who should identify the other owners.

TO REQUEST A PHRF RATING FOR A BOAT please fill in and **SIGN** the "DRYA PHRF HANDICAP COMMITTEE FORM" which can be found on the back of this form.

FEE SCHEDULE: Sustaining, Collegiate & Associate = **$35**, Family = **$45**, Junior = **$25**, Contributing = **$90** and up. Please **circle** your **Choice** and enter fee. See below for definitions of membership types.

BE SURE TO INCLUDE US SAILING MEMBER NUMBER.

Dues (*If yacht is registered, indicate only dues in excess of the $35 sustaining Fee.*) .. $35 _____

Yacht Registration Fee (includes handicapping & $35 sustaining Fee; select one alternative):

US Sailing member's yacht: ..... (**Membership #:** _____)..... $125_____

All other yachts: ..... $135_____

Late Registration Fee for boats registered last year DUE AFTER FEB. 5TH)..... $50_____

Non-DRYA members yacht handicapping certificate ($35 prior to March 1, 2007)... $40_____

Handicapping Certificate for DRYA members not registered to race.....$20_____

Seasons DRYA regatta results subscription..... $22_____

DRYA Handbook..... ..... $20_____

**********TOTAL********** $ _____

NOTE: D.R.Y.A. applicants must pay a SUSTAINING, FAMILY or COLLEGIATE Membership Fee. All boat owners wishing to race must pay the REGISTRATION FEE. **There is a $10 REGISTRATION credit for US Sailing Members; they require this differential for insurance.** Proof of membership is required (copy of card or mailing label). Since D.R.Y.A. is a 501(c) (3) charitable organization dues (not registrations or other charges) should be tax deductible in accordance with provisions of the IRS code.

MEMBERSHIP CATEGORIES

Sustaining Members - a person whom is a member in good standing of a Member Club or an Affiliated Sailing Organization shall be eligible to become a Sustaining Member of the Association.

Family Members: A person who is the child under the age of 21 or the spouse of a Sustaining Member shall be eligible to become a Family Member of the Association.

Junior Members: A person under the age of 21 who is a junior member in good standing of a Member Club, a member in good standing of the Association's junior sailing organization or the child of a member in good standing of a Member Club shall be eligible to become a Junior Member of the Association.

Collegiate Members: A person who is an undergraduate member in good standing of a collegiate sailing club that is a member of the Midwest Collegiate Sailing Association shall be eligible to become a Collegiate Member of the Association.

Associate Members: A person who is not otherwise eligible to become a member of the Association but has an interest in sail racing and the activities of the Association and its Member Clubs shall be eligible to become an Associate Member of the Association.

Contributing Members: A person who is eligible to become a member of the Association and who pays specified dues in an amount greater than those established by the Executive Committee for any other category of individual membership shall be eligible to become a Contributing Member of the Association.

Mail CHECK (U.S. Funds) and Registration to: D.R.Y.A., 23915 Jefferson Avenue, Suite 1, St Clair Shores, MI 48080.

PHRF AND OFFSHORE ONE DESIGN complete reverse side before signing to verify rig & sail data.

Registrant's signature_____Date_____Call or FAX D.R.Y.A. at 586-778-1000. Email: TheDRYA@drya.org. Web site: www.DRYA.org

DRYA PHRF HANDICAP MEASUREMENTS

23915 JEFFERSON AVENUE, SUITE 1
ST CLAIR SHORES, MI 48080
(586) 778-1000 Fax & Phone
Email TheDRYA@DRYA.org **Web Page:** www.drya.org

Each boat owner requesting a PHRF rating must complete this application with all data printed and signature affixed. Submit to the DRYA office with a DRYA Membership and Yacht Registration form which can also be found on www.drya.org.

SAIL PREFIX_____**SAIL NO**_____ **YACHT NAME**_____

DESIGN_____**HULL#**_____**YEAR**_____

OWNER_____

ADDRESS_____

CITY_____**STATE**_____**ZIP**_____

PHONE (H)_____**(W)**_____

EMAIL_____

YACHT CLUB_____

DIMENSIONS

HULL:
LOA_____**LWL**_____**BEAM**_____**DRAFT**_____**DISPL**_____

Design: LWL_____**BEAM**_____**DRAFT**_____**DISPL**_____

RIG:
I_____ **IS**_____ **Des I**_____ **Des IS**_____

J_____ **Des J**_____

P_____ **Des P**_____

E_____ **Des E**_____

SPL/SPRIT_____ **SPL/SPRIT**_____

MAST: Check Material; ALUMINUM ____ **CARBON**___ **OTHER**_____
NUMBER OF SPREADER PAIRS_____

SAIL MEASUREMENTS

SPINNAKER: SL_____ **SMW (GIRTH)** _____

LARGEST ASSYMETRICAL

LU_____**LE**_____ **SMW**_____ **LP**_____

LARGEST #1 GENOA LP_____

YEAR SAIL FIRST USED: MAIN_____**LT#1**_____**HVY #1**_____

LT SPIN_____**ALL PURPOSE SPIN**_____**LARGEST ASYM**_____

VARIABLES: (Check items)

ENGINE: INBOARD___ **EXP-SHAFT**___ **OUTBOARD**___ **SAILDRIVE**___

PROPELLOR TYPE:

FOLDING_____ **FEATHERING**_____ **IN APERATURE**____

FIXED____ **SOLID 2-BLADE**_____ **SOLID 3-BLADE**____**OTHER**_____

RUDDER: ATTACHED____ **SKEG**_____ **SPADE**_____ **OTHER**_____

TYPE OF KEEL:

FIN___ **FIN+BULB** ___ **TURBO**____ **FULL**____ **CB**____ **SHOAL**___

KEEL/BALLAST MATERIAL_____

ROLLER FURLING: Y N
JIB: ABOVE DECK_____ **BELOW DECK**_____
MAKE &MODEL # OF ROLLER FURLER_____
DIMENSIONS L-luff_____ **JLL**_____
JIB ALWAYS FULLY FURLABLE - Y N

MAIN: IN MAST_____ **IN BOOM**_____

MODIFICATIONS TO STANDARD BOAT AND DETAILS NOT COVERED ON LEFT SIDE OF PAGE

_____

_____

_____

_____**over**

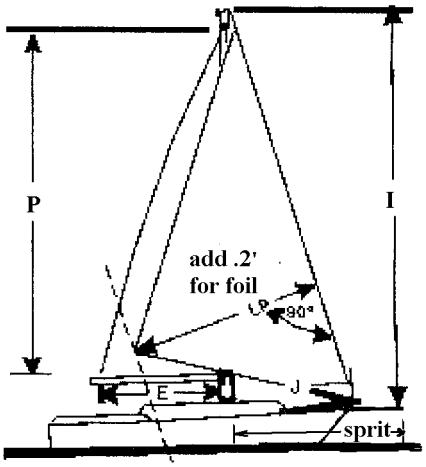

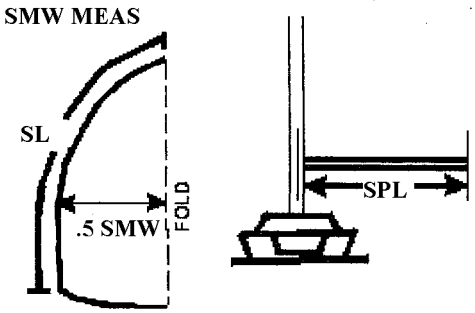

Roller furling credit forms must be submitted annually.
Review DRYA Handbook Section 15 on www.drya.org for details on measurements and handicapping.

I UNDERSTAND THAT IT IS THE OWNER'S RESPONSIBILITY TO NOTIFY THE HANDICAP COMMITTEE ABOUT ANY CHANGES IN THE BOAT OR ITS EQUIPMENT.

Signatures
Owner
_____**Date**_____

Measurer
_____**Date**_____

2007 VERSION 11-24-06 TPS